SHEET NUMBER															ITEM	ITEM EXT.	GRAND TOTAL	UNIT	DESCRIPTION	SEE SHEET NO.
OFFICE CALCS														196					FIG. 1307-3(b) DATE: JULY 2010	
																			PAVEMENT	
312															251	01000	312	SQ YD	PARTIAL DEPTH PAVEMENT REPAIR	
4140															253	01000	4140	SQ YD	PAVEMENT REPAIR	
9005															255	10001	9005	SQ YD	FULL DEPTH PAVEMENT REMOVAL AND RIGID REPLACEMENT, CLASS C, AS PER PLAN "A"	16
2894															255	10001	2894	SQ YD	FULL DEPTH PAVEMENT REMOVAL AND RIGID REPLACEMENT, CLASS C, AS PER PLAN "B"	16
34828															255	20000	34828	FT	FULL DEPTH PAVEMENT SAWING	
17759															304	20000	17759	CU YD	AGGREGATE BASE	
3892															305	13000	3892	SQ YD	9" CONCRETE BASE	
127															407	10000	127	GALLON	TACK COAT	
5813															408	10000	5813	GALLON	PRIME COAT	
1029															451	14001	1029	SQ YD	9" REINFORCED CONCRETE PAVEMENT, AS PER PLAN	12
31690															451	15001	31690	SQ YD	10" REINFORCED CONCRETE PAVEMENT, AS PER PLAN	12
6783															452	13001	6783	SQ YD	9" NON-REINFORCED CONCRETE PAVEMENT, AS PER PLAN	12
50342															452	17001	50342	SQ YD	VARIABLE THICKNESS NON-REINFORCED CONCRETE PAVEMENT, AS PER PLAN	12
																			WATER WORK	
														3649	638	02504	3649	FT	12" WATER MAIN DUCTILE IRON PIPE ANSI CLASS 53, MECHANICAL JOINTS AND FITTINGS	
														2481	638	02604	2481	FT	12" WATER MAIN DUCTILE IRON PIPE ANSI CLASS 53, BOLTLESS-RESTRAINED, JOINTS AND FITTINGS	
														2107	638	02700	2107	FT	12" WATER MAIN DUCTILE IRON PIPE ANSI CLASS 55, BALL AND SOCKET JOINTS AND FITTINGS	
														1608	638	02800	1608	FT	12" WATER MAIN POLYVINYL CHLORIDE PIPE AND FITTINGS, ASTM SDR 26	
														1142	638	02900	1142	FT	12" WATER MAIN POLYVINYL CHLORIDE PIPE AND FITTINGS, AWWA CLASS 150	
														438	638	04800	438	FT	¾" COPPER SERVICE BRANCH	
														464	638	05300	464	FT	¾" POLYETHYLENE SERVICE BRANCH	
														212	638	06704	212	FT	20" STEEL PIPE ENCASEMENT, OPEN CUT	
														310	638	07310	310	FT	24" STEEL PIPE ENCASEMENT, BORED OR JACKED	
														18	638	08100	18	EACH	12" GATE VALVE AND VALVE BOX	
														16	638	09200	16	EACH	12" CUTTING-IN SLEEVE, VALVE AND VALVE BOX	
														12	638	09700	12	EACH	12" X 6" TAPPING SLEEVE, VALVE AND VALVE BOX	
														36	638	10200	36	EACH	6" FIRE HYDRANT	
														10	638	10300	10	EACH	FIRE HYDRANT EXTENDED AND ADJUSTED TO GRADE	
														8	638	10500	8	EACH	FIRE HYDRANT REMOVED AND RESET	
														8	638	10600	8	EACH	FIRE HYDRANT AND GATE VALVE REMOVED AND RESET	
														12	638	10800	12	EACH	VALVE BOX ADJUSTED TO GRADE	
														6	638	10900	6	EACH	SERVICE BOX ADJUSTED TO GRADE	
														4	638	11100	4	EACH	METER AND CHAMBER REMOVED AND RESET	

CALCULATED JKP CHECKED FGW

GENERAL SUMMARY

TRU-99-13.48

SHEET NUMBER														ITEM	ITEM EXT.	GRAND TOTAL	UNIT	DESCRIPTION	SEE SHEET NO.
		16		18		23		55		192	262								
																		LIGHTING GENERAL SUMMARY	198
																		TRAFFIC CONTROL GENERAL SUMMARY	216
																		LANDSCAPING GENERAL SUMMARY	224
																		RETAINING WALLS	
																		OPTION A: REINFORCED EARTH WALL	
										1710				203	20000	1710	CU YD	EMBANKMENT	
										3474				203	35000	3474	CU YD	GRANULAR EMBANKMENT	
										LUMP				503	11100	LUMP		COFFERDAMS AND EXCAVATION BRACING	
										1124				503	21101	1124	CU YD	UNCLASSIFIED EXCAVATION, AS PER PLAN	108
										4766				SPECIAL	61013500	4766	SQ FT	REINFORCED EARTH WALL SYSTEM	190
																		OPTION B: RETAINED EARTH WALL	
										1636				203	20000	1636	CU YD	EMBANKMENT	
										3584				203	35000	3584	CU YD	GRANULAR EMBANKMENT	
										LUMP				503	11100	LUMP		COFFERDAMS AND EXCAVATION BRACING	
										1150				503	21101	1150	CU YD	UNCLASSIFIED EXCAVATION, AS PER PLAN	108
										4738				SPECIAL	61013700	4738	SQ FT	RETAINED EARTH WALL SYSTEM	190
																		BUILDING DEMOLITION	
											LUMP			202	56000	LUMP		BUILDING DEMOLISHED, PARCEL NO. 11-WD-1, 1 STORY BRICK BUILDING	
											LUMP			202	56000	LUMP		BUILDING DEMOLISHED, PARCEL NO. 13-T, 1 STORY BLOCK BUILDING	
											LUMP			202	56000	LUMP		BUILDING DEMOLISHED, PARCEL NO. 13-WL, 2 STORY BRICK BUILDING	
											LUMP			202	56000	LUMP		BUILDING DEMOLISHED, PARCEL NO. 19-T, 1 STORY METAL BUILDING	
																		STRUCTURES 20' AND OVER	
																		FOR STRUCTURE TRU-99-1924 GENERAL SUMMARY	229
																		FOR STRUCTURE TRU-99-2056 GENERAL SUMMARY	236
										878				SPECIAL	51272000	878	SQ YD	EPOXY WATERPROOFING OVERLAY (1/4" THICK)	190
																		MAINTENANCE OF TRAFFIC	
		10												614	11100	10	HOUR	LAW ENFORCEMENT OFFICER WITH PATROL CAR	
		5												614	12460	5	EACH	WORK ZONE MARKING SIGN	
				38										614	12470	38	EACH	WORK ZONE SPEED LIMIT SIGN	
		100												614	12500	100	EACH	REPLACEMENT SIGN	
		200												614	12600	200	EACH	REPLACEMENT DRUM	
								1528						614	12800	1528	EACH	WORK ZONE RAISED PAVEMENT MARKER	
						1201								614	13100	1201	EACH	BARRIER REFLECTOR	
		14.00												614	20300	14.00	MILE	WORK ZONE LANE LINE, CLASS I, 740.06, TYPE II	
						0.11								614	21300	0.11	MILE	WORK ZONE CENTER LINE, CLASS I, 740.06, TYPE II	
		0.26												614	21700	0.26	MILE	WORK ZONE CENTER LINE, CLASS II, 740.06, TYPE II	
						4.33								614	22000	4.33	MILE	WORK ZONE EDGE LINE, CLASS I	
						7.34								614	22300	7.34	MILE	WORK ZONE EDGE LINE, CLASS I, 740.06, TYPE II	
						48								614	26600	48	FT	WORK ZONE STOP LINE, CLASS I, 740.06, TYPE II	
		5692												614	28600	5692	FT	WORK ZONE GORE MARKING, CLASS II, 740.06, TYPE II	
						LUMP								615	10000	LUMP		ROADS FOR MAINTAINING TRAFFIC	
						944								615	35001	944	SQ YD	PAVEMENT FOR MAINTAINING TRAFFIC, AS PER PLAN	17
		30												616	10000	30	M GAL	WATER	
		10												616	20000	10	TON	CALCIUM CHLORIDE	
						30280								622	40021	30280	FT	PORTABLE CONCRETE BARRIER, 32", AS PER PLAN	58
														614	11000	LUMP		MAINTAINING TRAFFIC	
														619	16020	8	MONTH	FIELD OFFICE, TYPE C	
														623	10000	LUMP		CONSTRUCTION LAYOUT STAKES	
														624	10000	LUMP		MOBILIZATION	

FIG. 1307-3(c)
DATE: JULY 2010

CALCULATED JKP
CHECKED FGW

GENERAL SUMMARY

TRU-99-13.48

I:\pr\V3Stds\SamplePlans\2010July\DGN\1307_DGN\1307_3c.dgn 15-JUL-2010 8:56AM mwawszki

SHEET NUMBER								PARTICIPATION			ITEM	ITEM EXT.	GRAND TOTAL	UNIT	DESCRIPTION	SEE SHEET NO.
	OFFICE CALCS		64	68	97	165	175	100% CITY	NH	STP						
															ROADWAY	
	1000								1000		202	23000	1000	SQ YD	PAVEMENT REMOVED	
			12							12	202	58700	12	EACH	MANHOLE ABANDONED	
							2		2		202	75403	2	EACH	LIGHT POLE REMOVED FOR STORAGE, AS PER PLAN	130
							2		2		202	75500	2	EACH	LIGHT POLE FOUNDATION REMOVED	
							2		2		202	75505	2	EACH	LUMINAIRE REMOVED FOR STORAGE, AS PER PLAN	130
					500				500		606	98000	500	FT	GUARDRAIL, MISC.: TENSIONED CABLE (BRIFEN) (ALTERNATE 1)	
					20				20		606	98100	20	EACH	GUARDRAIL, MISC.: TENSIONED CABLE ANCHOR TERMINAL (BRIFEN) (ALTERNATE 1)	
					500				500		606	98000	500	FT	GUARDRAIL, MISC.: TENSIONED CABLE (TRINITY) (ALTERNATE 2)	
					2				2		606	98100	2	EACH	GUARDRAIL, MISC.: TENSIONED CABLE ANCHOR TERMINAL (TRINITY) (ALTERNATE 2)	
					500				500		606	98000	500	FT	GUARDRAIL, MISC.: TENSIONED CABLE (MARION STEEL) (ALTERNATE 3)	
					2				2		606	98100	2	EACH	GUARDRAIL, MISC.: TENSIONED CABLE ANCHOR TERMINAL (MARION STEEL) (ALTERNATE 3)	
															EROSION CONTROL	
						2				2	659	00100	2	EACH	SOIL ANALYSIS	
						44				44	659	00300	44	CU YD	TOPSOIL	
						400				400	659	10000	400	SQ YD	SEEDING AND MULCHING	
						20				20	659	14000	20	SQ YD	REPAIR SEEDING AND MULCHING	
						20				20	659	15000	20	SQ YD	INTER-SEEDING	
						0.05				0.05	659	20000	0.05	TON	COMMERCIAL FERTILIZER	
						0.08				0.08	659	31000	0.08	ACRES	LIME	
						2.2				2.2	659	35000	2.2	M GAL	WATER	
						0.9				0.9	659	40000	0.9	M SQ FT	MOWING	
											832	15000	LUMP		STORM WATER POLLUTION PREVENTION PLAN	
											832	30000	5000	EACH	EROSION CONTROL	
															PAVEMENT	
	1844									1844	254	01000	1844	SQ YD	PAVEMENT PLANING, ASPHALT CONCRETE	
	1265									1265	301	46000	1265	CU YD	ASPHALT CONCRETE BASE, PG64-22	
	2627								986	1641	304	20000	2627	CU YD	AGGREGATE BASE	
	5333								5333		305	12000	5333	SQ YD	8" CONCRETE BASE	
	533								533		407	10000	533	GALLON	TACK COAT	
	3114								1066	2048	407	14000	3114	GALLON	TACK COAT FOR INTERMEDIATE COURSE	
	10									10	442	20000	10	CU YD	ASPHALT CONCRETE SURFACE COURSE, 12.5MM, TYPE A (448)	
	497								268	229	446	46040	497	CU YD	ASPHALT CONCRETE INTERMEDIATE COURSE, TYPE 2, PG64-28	
	38									38	446	46040	38	CU YD	ASPHALT CONCRETE INTERMEDIATE COURSE, TYPE 2, PG64-28 (DRIVEWAYS)	
	415								226	189	446	50000	415	CU YD	ASPHALT CONCRETE SURFACE COURSE, TYPE 1H	
	18									18	446	50000	18	CU YD	ASPHALT CONCRETE SURFACE COURSE, TYPE 1H (DRIVEWAYS)	
	4000								4000		609	12000	4000	FT	COMBINATION CURB AND GUTTER, TYPE 2	
															WATER WORK	
				896				896			SPECIAL	63860400	896	FT	12" DUCTILE IRON WATER PIPE AND FITTINGS (COL. 801)	
				14				14			SPECIAL	63861900	14	EACH	6" VALVE AND APPURTENANCES (COL. 802)	
				10				10			SPECIAL	63863800	10	EACH	1-½" WATER SERVICE TAP, COMPLETE (COL. 805)	
				8				8			SPECIAL	63865502	8	EACH	SERVICE BOX REMOVED AND RESET (COL. 807)	
				4				4			SPECIAL	63866602	4	EACH	FIRE HYDRANT, TYPE A (COL. 809)	
															SANITARY SEWER	
			200							200	603	00900	200	FT	6" CONDUIT, TYPE B, 706.01 OR 706.08 WITH 706.11 OR 706.12 JOINTS	
			284							284	603	02000	284	FT	8" CONDUIT, TYPE C, 706.08 WITH 706.12 JOINTS	
			273							273	603	04400	273	FT	12" CONDUIT, TYPE B, 706.03 WITH 706.11 JOINTS	
			28							28	603	05900	28	FT	15" CONDUIT, TYPE B, 706.03 WITH 706.11 JOINTS	
			230							230	603	07400	230	FT	18" CONDUIT, TYPE B, 706.03 WITH 706.11 JOINTS	
			5							5	604	31500	5	EACH	MANHOLE, NO. 3 WITH 706.11 JOINTS	
			8							8	604	34500	8	EACH	MANHOLE ADJUSTED TO GRADE	
			3							3	604	35500	3	EACH	MANHOLE RECONSTRUCTED TO GRADE	

SP 1307-4
DATE: JULY 2010

CALCULATED DMK
CHECKED CML

GENERAL SUMMARY

FRA-11-26.48

SEEDING END WIDTH	SEEDING SQ. YDS.		END AREA CUT	END AREA FILL	VOLUME CUT	VOLUME FILL
68		369+00	42	30		
	378					
	-79	DRIVE 368+90 LT			4	2
68		368+50	24	35	61	60
	378					
					57	55
68		368+00	38	24		
		DRIVE 367+63 RT			5	2
	347				79	40
	-137	DRIVE 367+63 RT	47	19		
36		367+40				
	-135	DRIVE 367+16 RT			69	31
	200					
		DRIVE 367+16 RT			2	3
36		366+90	28	15		
	253				43	52
78		366+50	18	41		
	433				38	68
	-135	DRIVE 366+01 RT			2	3
78		366+00	23	32		
	1503	TOTAL			360	316

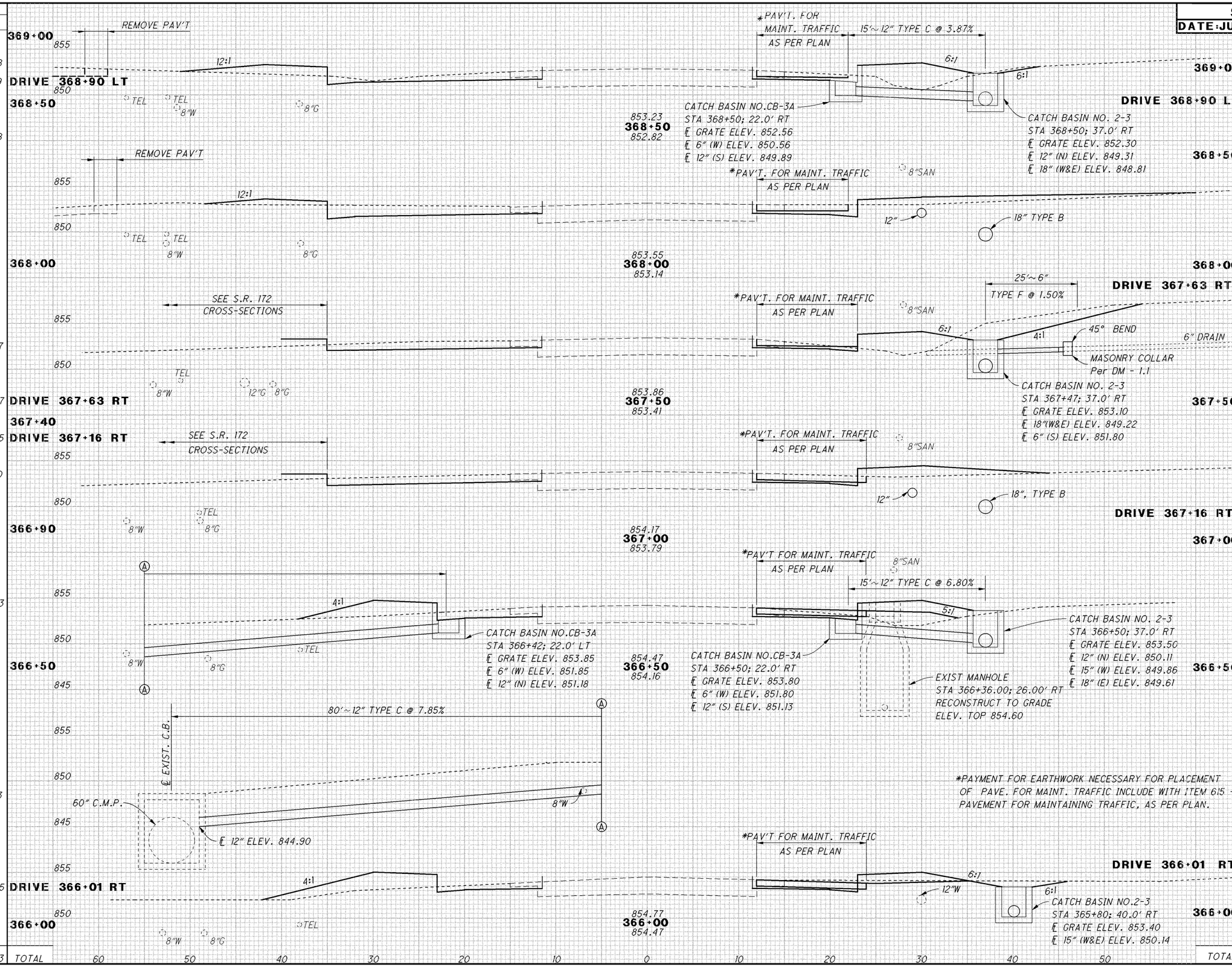

SP 1310-3
DATE: JULY 2010

CALCULATED MJG
CHECKED DSN

CROSS SECTIONS - S.R. 67
STA. 366+00 TO STA. 368+50

CLI-67-16.86

SP 1310-7
DATE: JULY 2010

CALCULATED TKB
CHECKED MDC

SEEDING END WIDTH	SEEDING SQ. YDS.	END AREA CUT	END AREA FILL	VOLUME CUT	VOLUME FILL
68	315	81	26	224	32
81	415	160	9	459	3
64	404	335	4	602	8
64	355	315	5	605	16
	1489			1609	59

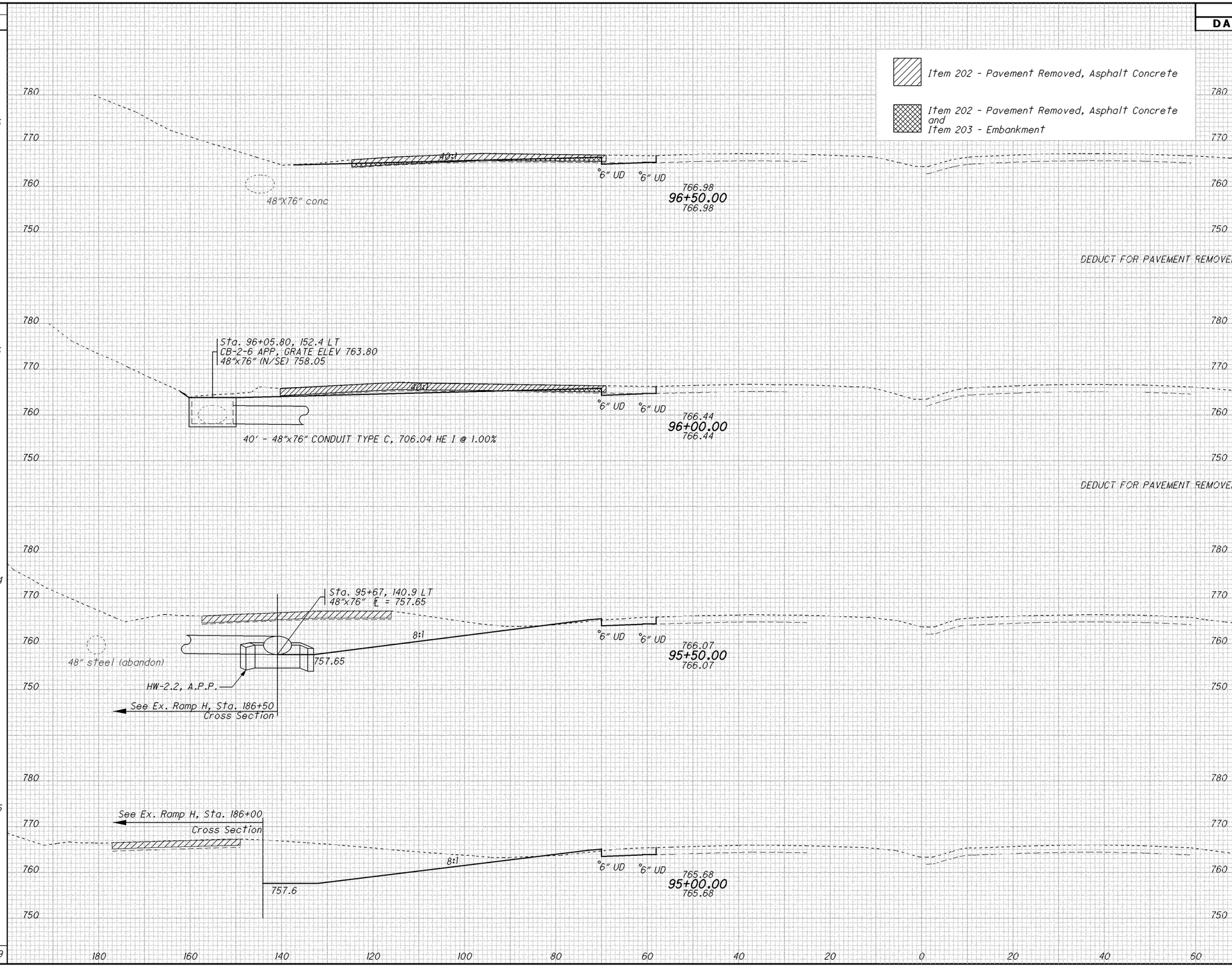

CROSS SECTIONS - S.R. 315
STA. 95+50 TO STA. 96+50

FRA-315-12.18

I:\pr\V3Stds\SamplePlans\2010July\DGN\1310_DGN\1310_7.dgn 15-JUL-2010 8:56AM mwawszki

SP 1312-1
DATE: JULY 2010

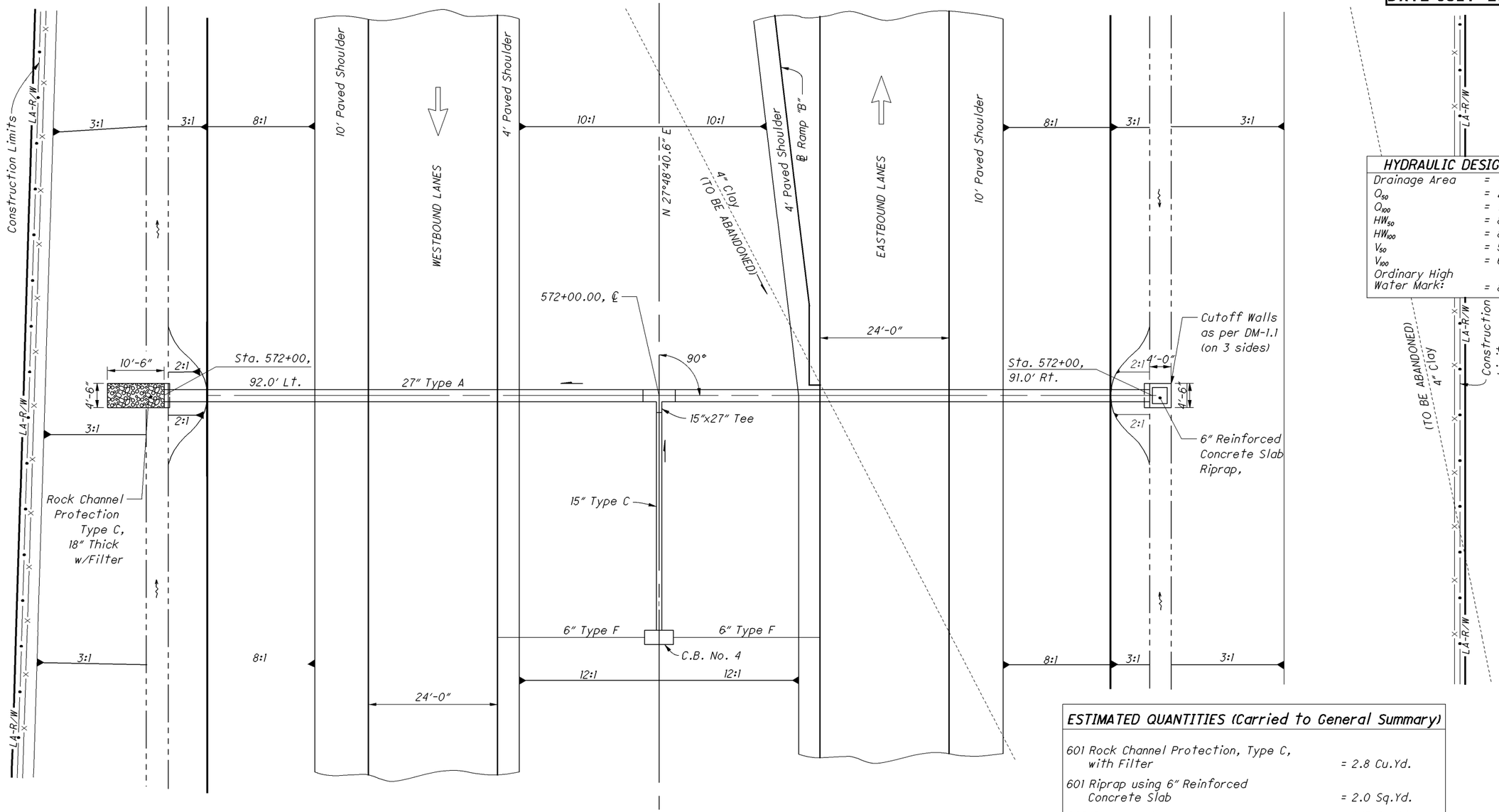

HYDRAULIC DESIGN DATA	
Drainage Area	= 28 Ac.
Q_{50}	= 22 cfs
Q_{100}	= 25 cfs
HW_{50}	= 829.7'
HW_{100}	= 830.1'
V_{50}	= 5.6 fps
V_{100}	= 6.1 fps
Ordinary High Water Mark:	= 827.3'

ESTIMATED QUANTITIES (Carried to General Summary)	
601 Rock Channel Protection, Type C, with Filter	= 2.8 Cu.Yd.
601 Riprap using 6" Reinforced Concrete Slab	= 2.0 Sq.Yd.
602 Concrete Masonry	= 1.15 Cu.Yd.
603 27" Conduit, Type A, 706.02	= 183 Ft.

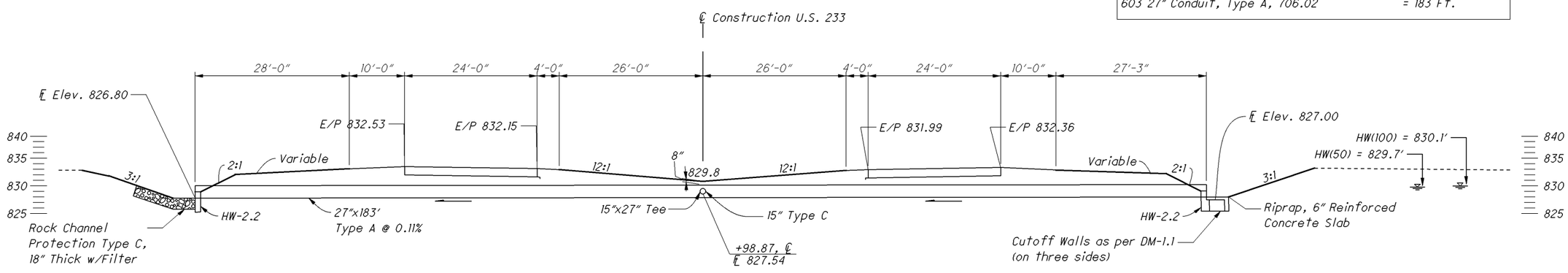

HORIZONTAL SCALE IN FEET 0 5 10 20

CALCULATED DMK
CHECKED CML

CULVERT DETAILS
U.S. 233 - STA. 572+00

ALL-233-22.69

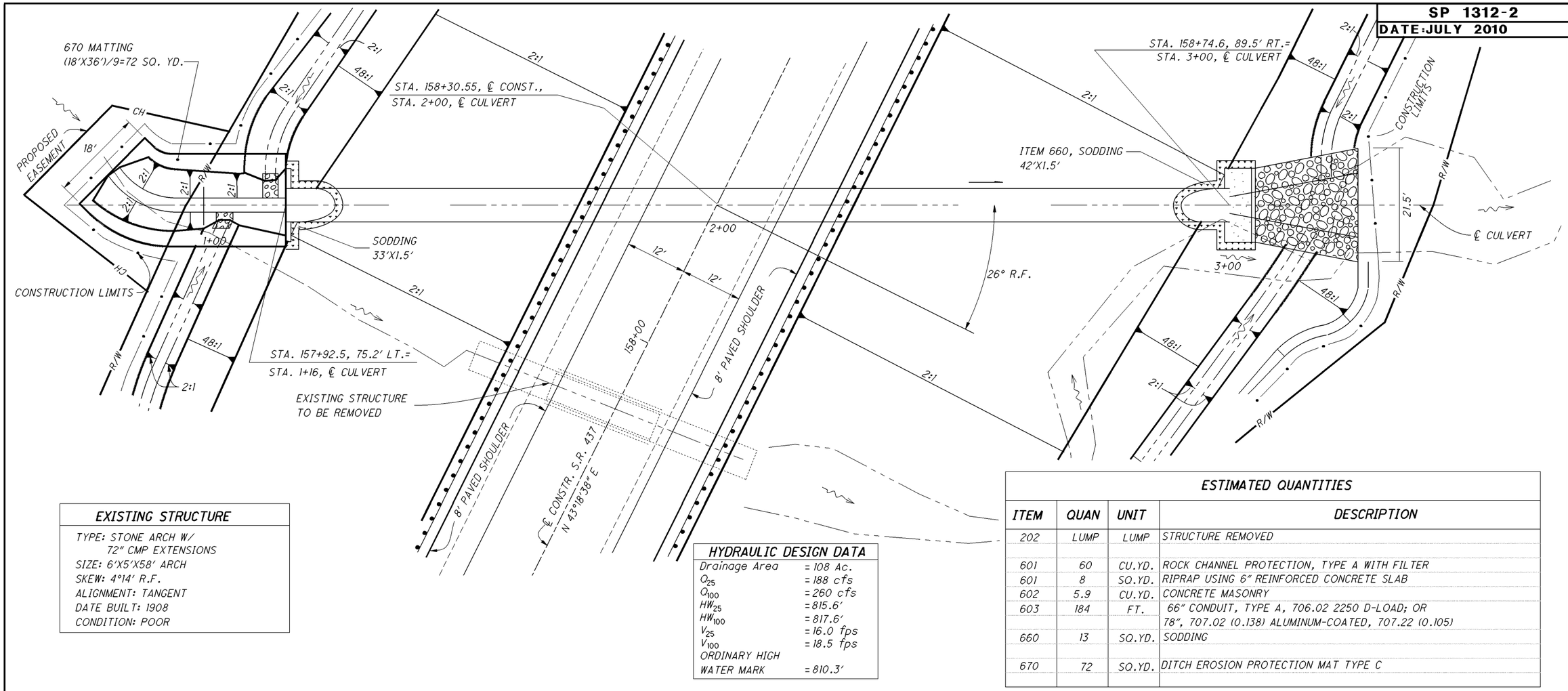

EXISTING STRUCTURE

TYPE: STONE ARCH W/
72" CMP EXTENSIONS
SIZE: 6'X5'X58' ARCH
SKEW: 4°14' R.F.
ALIGNMENT: TANGENT
DATE BUILT: 1908
CONDITION: POOR

HYDRAULIC DESIGN DATA

Drainage Area	= 108 Ac.
Q_{25}	= 188 cfs
Q_{100}	= 260 cfs
HW_{25}	= 815.6'
HW_{100}	= 817.6'
V_{25}	= 16.0 fps
V_{100}	= 18.5 fps
ORDINARY HIGH WATER MARK	= 810.3'

ESTIMATED QUANTITIES

ITEM	QUAN	UNIT	DESCRIPTION
202	LUMP	LUMP	STRUCTURE REMOVED
601	60	CU.YD.	ROCK CHANNEL PROTECTION, TYPE A WITH FILTER
601	8	SQ.YD.	RIPRAP USING 6" REINFORCED CONCRETE SLAB
602	5.9	CU.YD.	CONCRETE MASONRY
603	184	FT.	66" CONDUIT, TYPE A, 706.02 2250 D-LOAD; OR 78", 707.02 (0.138) ALUMINUM-COATED, 707.22 (0.105)
660	13	SQ.YD.	SODDING
670	72	SQ.YD.	DITCH EROSION PROTECTION MAT TYPE C

QUANTITIES CARRIED TO DRAINAGE SUBSUMMARY, SHEET 37

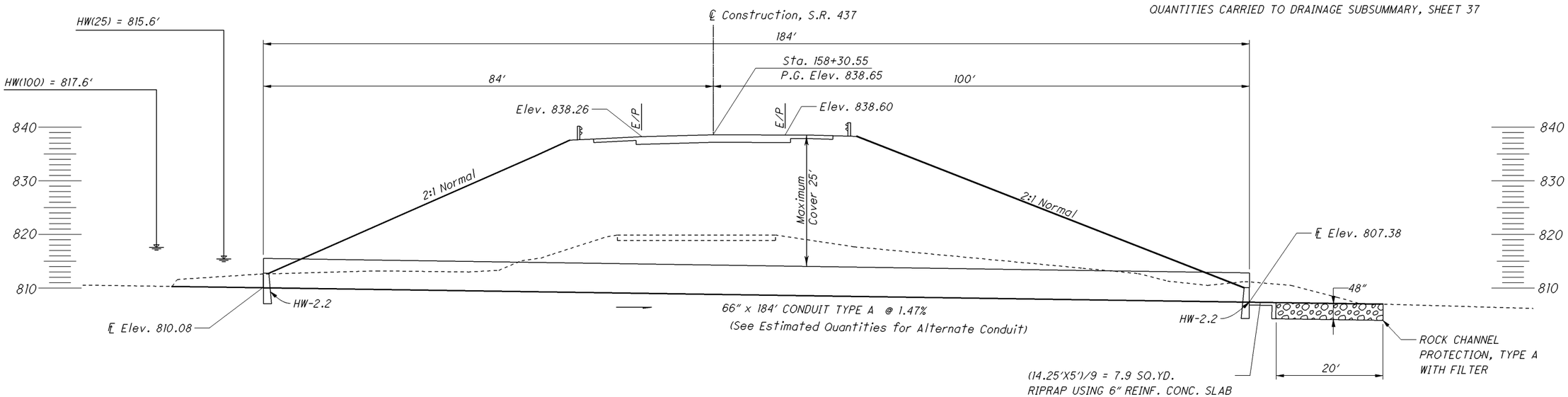

HORIZONTAL SCALE IN FEET 0 5 10 20

CALCULATED JOH
CHECKED JDH

CULVERT DETAIL
S.R. 437 STA. 158+30

PRE-437-2.65

SP 1312-3
DATE: JULY 2010

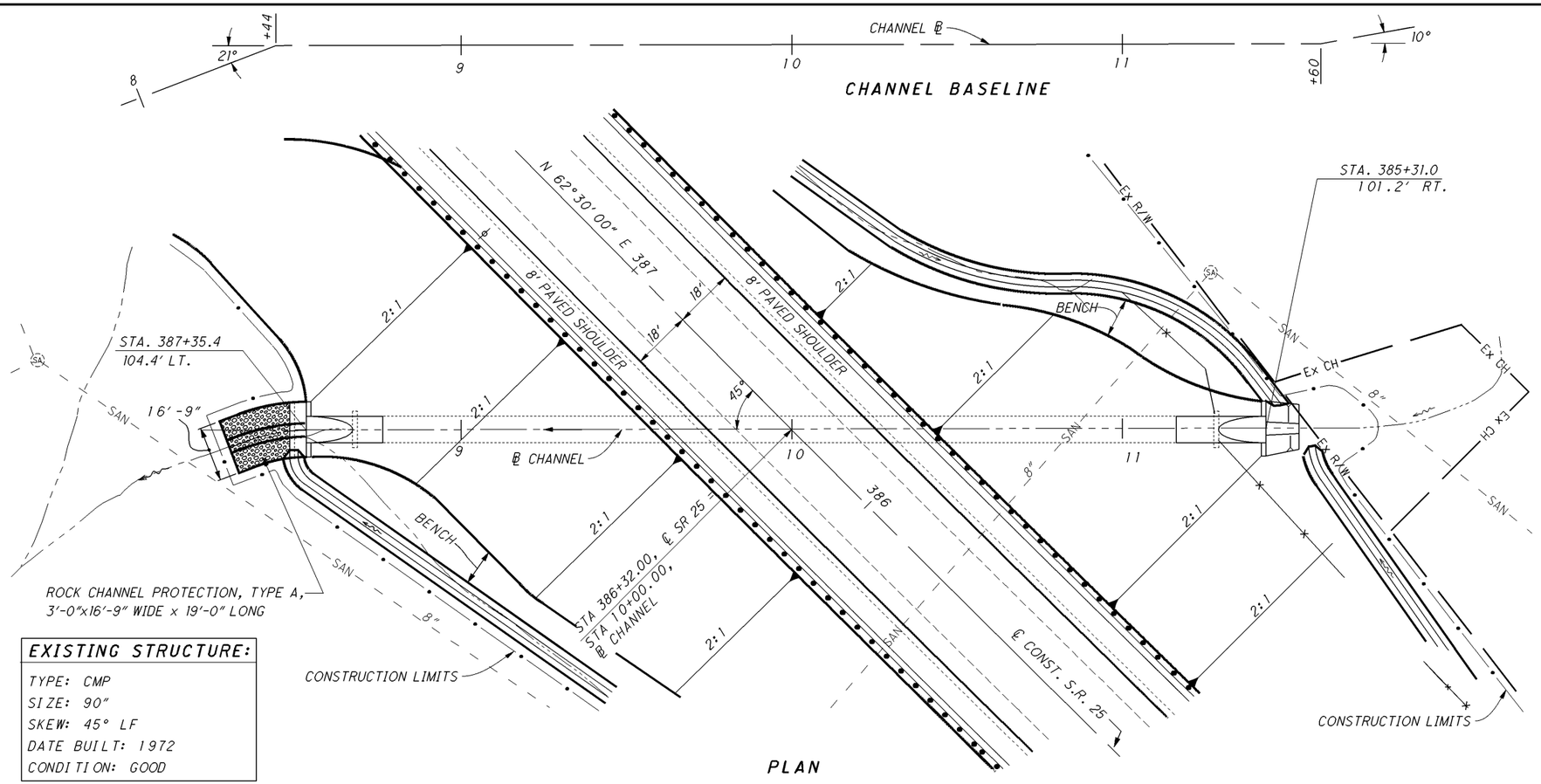

PLAN

EXISTING STRUCTURE:
TYPE: CMP
SIZE: 90"
SKEW: 45° LF
DATE BUILT: 1972
CONDITION: GOOD

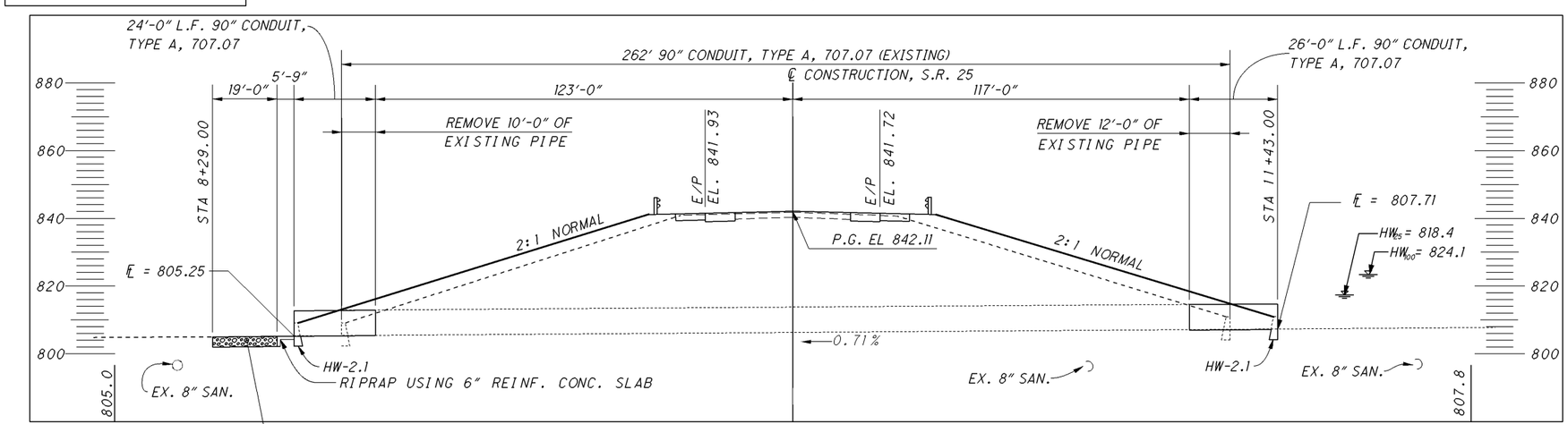

ROCK CHANNEL PROTECTION,
TYPE A, 36" THICK
W/ FABRIC FILTER

PROFILE ALONG CENTERLINE OF CHANNEL

HYDRAULIC DESIGN DATA	
Drainage Area	= 540 Ac.
Q_{25}	= 480 cfs
Q_{100}	= 640 cfs
HW_{25}	= 818.4'
HW_{100}	= 824.1'
V_{25}	= 13.5 fps
V_{100}	= 16.0 fps
ORDINARY HIGH WATER MARK	= 808'

ESTIMATED QUANTITIES

ITEM	QUANTITY	UNIT	DESCRIPTION
601	9.3	SQ. YD.	RIP-RAP USING 6" REINFORCED CONCRETE SLAB
601	35.4	CU. YD.	ROCK CHANNEL PROTECTION, TYPE A WITH FABRIC FILTER
602	8.0	CU. YD.	CONCRETE MASONRY
603	50	FT.	90" CONDUIT, TYPE A, 707.07
			QUANTITIES CARRIED TO SHEET NO. 38

HORIZONTAL SCALE IN FEET
0 10 20 40

CALCULATED JKP
CHECKED FGW

CULVERT DETAIL
STA. 386+32

STA-25-16.86

SP 1312-6(a)
DATE: JULY 2010

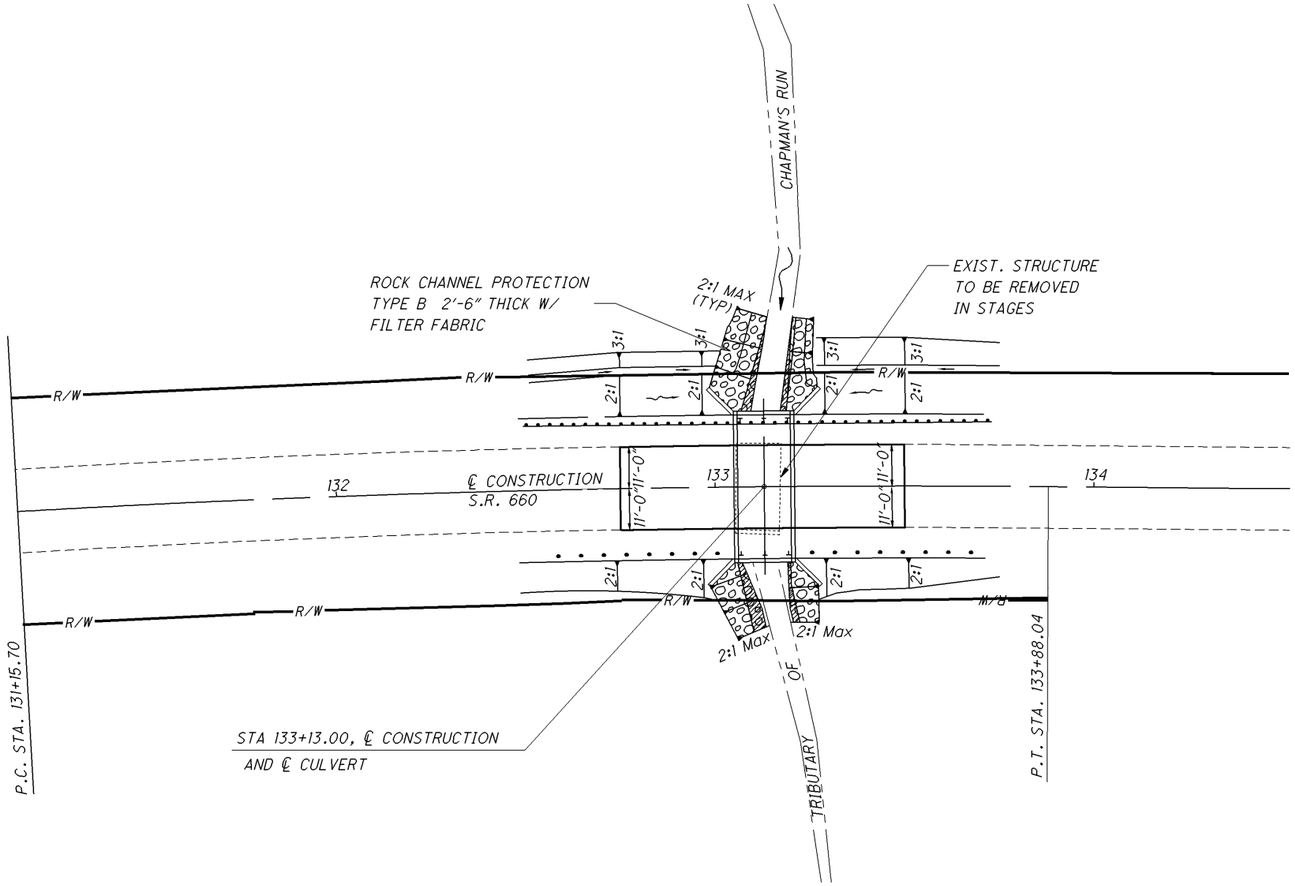

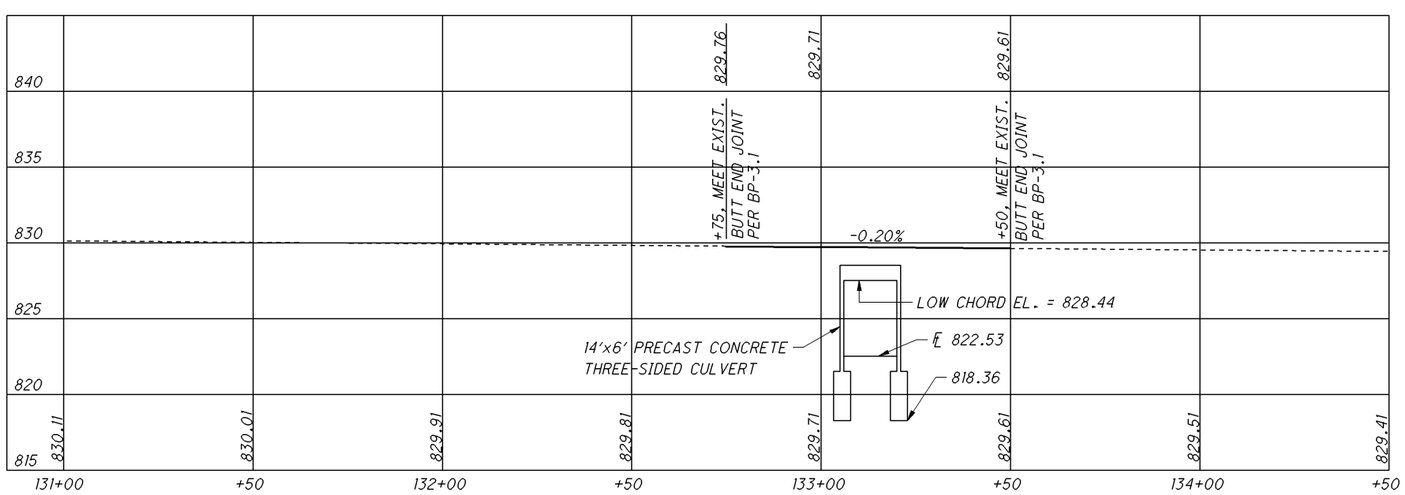

HYDRAULIC DATA

DRAINAGE AREA: 0.79 SQ.MI.
EXISTING WATERWAY OPENING: 60.0 SQ.FT.
PROPOSED WATERWAY OPENING: 70.0 SQ.FT.
ORDINARY HIGH WATER MARK: 822.9'

Q_{10}	=	297 CFS	Q_{100}	=	518 CFS
V_{10}	=	6.9 FPS	V_{100}	=	7.9 FPS
HW_{10}	=	827.8	HW_{100}	=	829.9

EXISTING STRUCTURE

TYPE: CONCRETE SLAB ON GRAVITY WALL ABUTMENT
SPAN: 12'-0"
ROADWAY: 22'-5" F/F RAILS
ALIGNMENT: CURVE
APPROACH SLAB: NONE
SUPERELEVATION: VARIES
DATE BUILT: 1900
STRUCTURE FILE NO. 3006514
SKEW: 0° REFERENCE CHORD
CONDITION: POOR
LOADING: S-11.3(7)

PROPOSED STRUCTURE

TYPE: PRECAST REINFORCED CONCRETE FLAT-TOPPED
THREE-SIDED CULVERT
SPAN: 14'-0" F/F CULVERT
ROADWAY: 34'-0" F/F RAILS
ALIGNMENT: 1°19'11" CURVED TO THE RIGHT
SUPERELEVATION: VARIES
APPROACH SLAB: NONE
SKEW: 0°
WEARING SURFACE: ASPHALT CONCRETE
LOADING: HS-20-44 AND THE ALTERNATE MILITARY
LOADING

N

HORIZONTAL SCALE IN FEET
0 10 20 40

CALCULATED KEW
CHECKED JOH

CULVERT PLAN AND PROFILE
STA. 133+13.00

GUE-660-2.52

EXISTING STRUCTURE

TYPE: 48" AND 54" CORRUGATED METAL PIPES

SKEW: 16° L.F.

ALIGNMENT: TANGENT

PROPOSED STRUCTURE

TYPE: 53"X83" ELLIPTICAL CONCRETE PIPE

SKEW: 16° L.F.

ALIGNMENT: TANGENT

HYDRAULIC DESIGN DATA

DRAINAGE AREA : 344 ACRES
Q(25): 230 CFS
HW(25): 666.24 FT
V(25): 11 FT/S
Q(100): 325 CFS
HW(100): 668.81 FT
V(100): 13 FT/S
ORDINARY HIGH WATER MARK: 661.0'

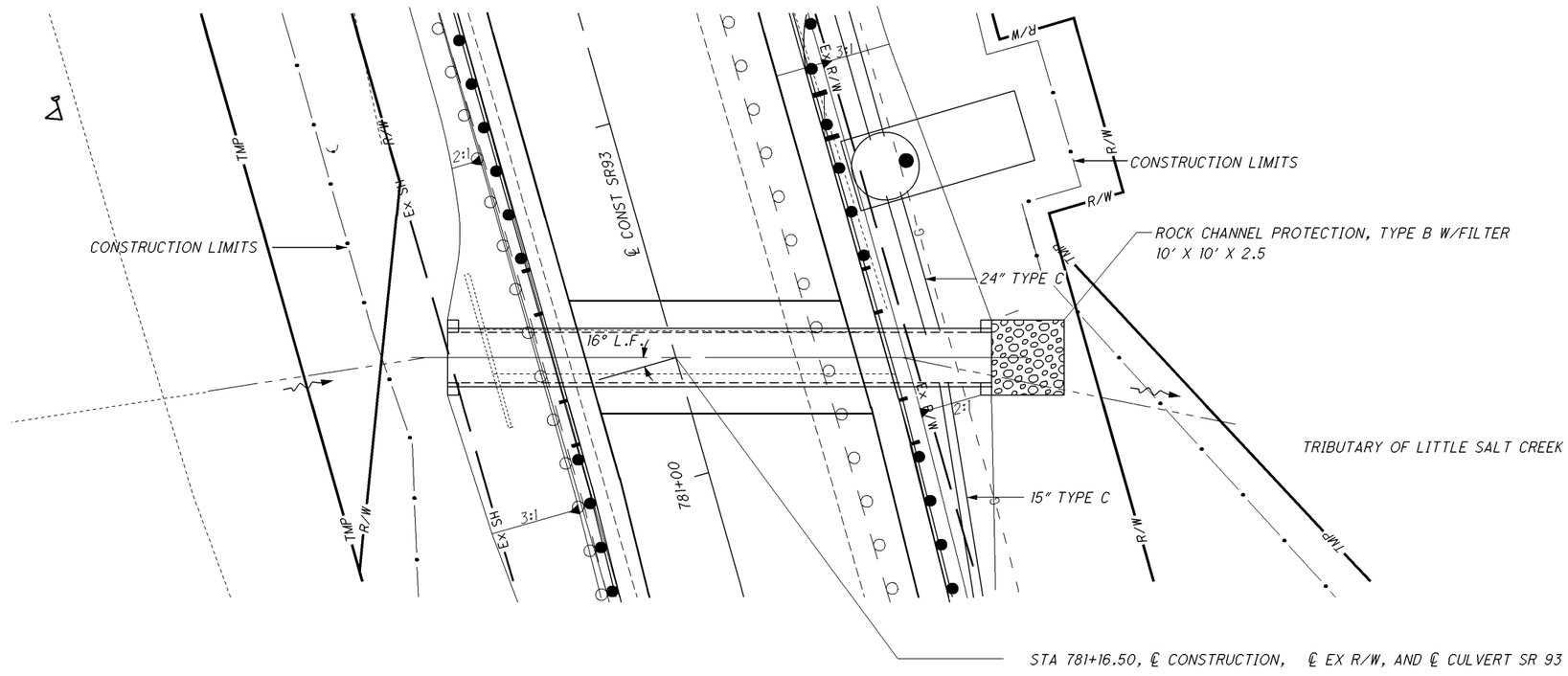

ESTIMATED QUANTITES CARRIED TO GENERAL SUMMARY

601	ROCK CHANNEL PROTECTION TYPE B W/FILTER	9 CU.YD.
602	CONCRETE MASONRY	3.3 CU.YD.
603	53" X 83" CONDUIT, TYPE A, 706.04 HE I	75 FT.

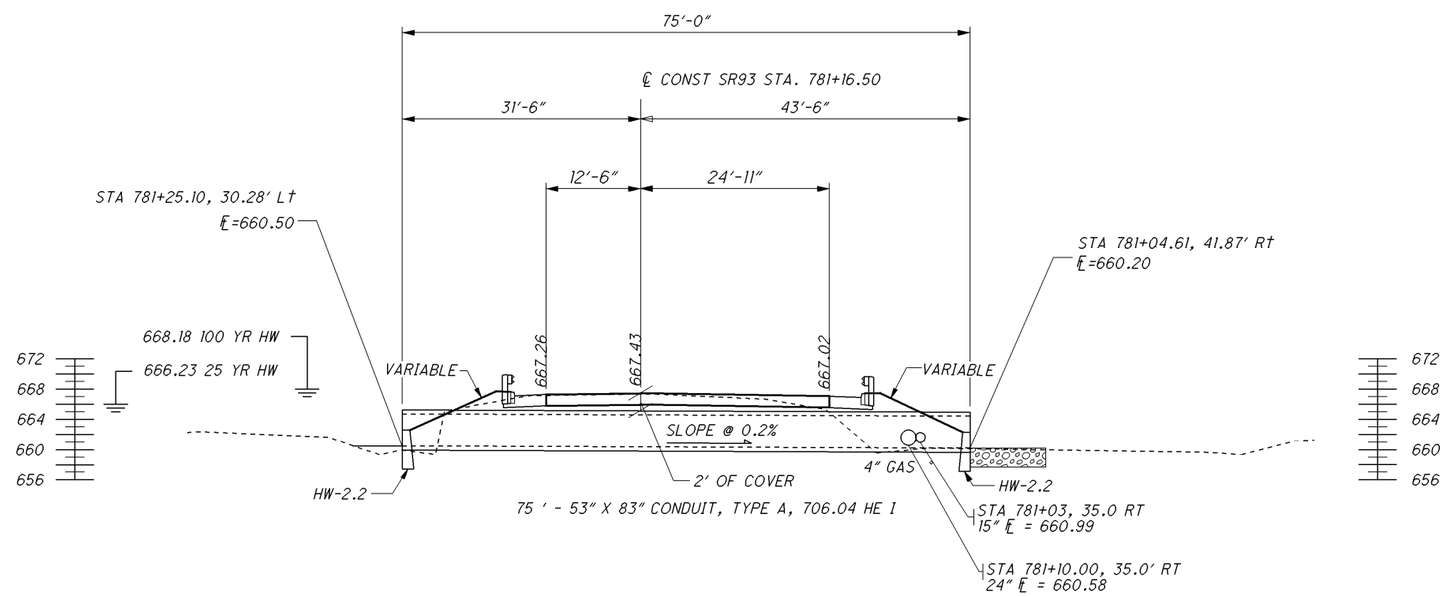

HORIZONTAL SCALE IN FEET 0 5 10 20

CALCULATED MRV
CHECKED MLC

CULVERT DETAIL STA 781+16.50

JAC-93-14.35

I:\pr\V3Stds\SamplePlans\2010July\DGN\1312_DGN\1312_7.dgn 15-JUL-2010 8:56AM mwawszki